Nauticam
innovation underwater

NA - 5DIV

Instruction manual

Product number: 17325

FORWARD

Thank you for your purchase of a NAUTICAM housing.

At NAUTICAM, we pride ourselves in the ability to recognise the requirements of professional as well as amateur underwater photographers and fulfill them through the innovative designs of our products. We strive to achieve a high level of user-friendliness by allowing stress-free installation and easy operation of all important functions of the camera.

Each housing is individually inspected and water pressure tested to ensure optimum quality.

Please read this manual carefully before using the housing, this will maximise its performance as well as its lifetime.

TABLE OF CONTENTS

Warranty 4
Precautions 5
Package Contents 7
Specifications 8
Identification of Parts 9
Opening and Closing the Housing 13
Preparation of the Housing 15
Installing the Camera 20
Mounting the Port 23
Changing the Viewfinder 27
Care and Maintenance 29
Optional Accessories 30

WARRANTY

All NAUTICAM Products are warranted against any material and manufacturing defects for two years from the date of purchase for consumer use. Please fill in the warranty cards shipped with our housings and viewfinders at the time of sale and return them to your point of purchase within a month. If we do not receive the completed warranty card for a particular product, the warranty period would be assumed to begin from the day that the product is shipped from our facility. This warranty only applies to products purchased from authorised NAUTICAM dealers and does not extend beyond the original retail purchaser.

To return your product for service, please contact your regional authorized service centre(s). Please note that this warranty only applies when the product is purchased in the territory where the service centre is located.

NAUTICAM accepts no liability for any damage to and defects in the housing caused by improper use and/or poor maintenance; it is the responsibility of the owner to carefully follow the instructions in our manuals.

NAUTICAM does not hold responsibility for damage, of any nature, to any equipment used with and/or placed within our products.

NAUTICAM accepts no liability for any loss of captured images or the inability to capture images even if it is due to the malfunctioning of our products.

Unauthorised modifications and/or repairs of our products will automatically invalidate the warranty.

PRECAUTIONS

- A water-tight test without the camera inside the housing is highly recommended when using the system for the first time and after the changing of port and O-ring(s).

- Do not use lubricants from other brands with the silicone rubber O-ring on this housing, only use the lubricant provided by NAUTICAM.

- Discontinue use immediately should you notice any leakage.

- Store the housing in a robust, shock-proof container during transportation; avoid transporting with any equipment, such as a camera, inside the housing.

- When travelling by air, do not close the housing as this may lead to a pressure difference between the atmosphere and inside the housing.

- Care must be taken when opening the housing, as pressure may build up inside the housing which increases the opening force.

- Do not open the product in a wet or sandy environment. Protect the interior from moisture and debris in order to prevent malfunction or leakage.

- Do not store the product in an environment of high humidity.

- Do not leave the housing and the monitor in direct sunlight for prolonged periods.

- Keep out of reach of children, failure to do so could result in injury.

- Defective products should be shipped to our distributors for service, unauthorized disassembling and/or modifications could result in malfunction or leakage.

PACKAGE CONTENTS

- NA-5DIV housing
- Canon hotshoe plug to dual Nikonos connectors (trigger and ground connections only)
- Spare silicone rubber O-ring for housing
- O-ring remover
- CR2032 battery
- Lubricant
- Set of Allen keys
- Instruction manual

SPECIFICATIONS

Construction	Housing body:	Aluminium alloy
	Surface treatment:	Hard anodised
	Display window:	Abrasion resistant polycarbonate
Dimensions	Width:	358mm
	Height:	187mm
	Depth:	135mm
Weight	Approx. 2.91kg	
Buoyancy	Slightly negative	
Depth rating	100 metres	
Port mount	N120	
Compatible camera	Canon EOS 5D Mark IV	

IDENTIFICATION OF PARTS

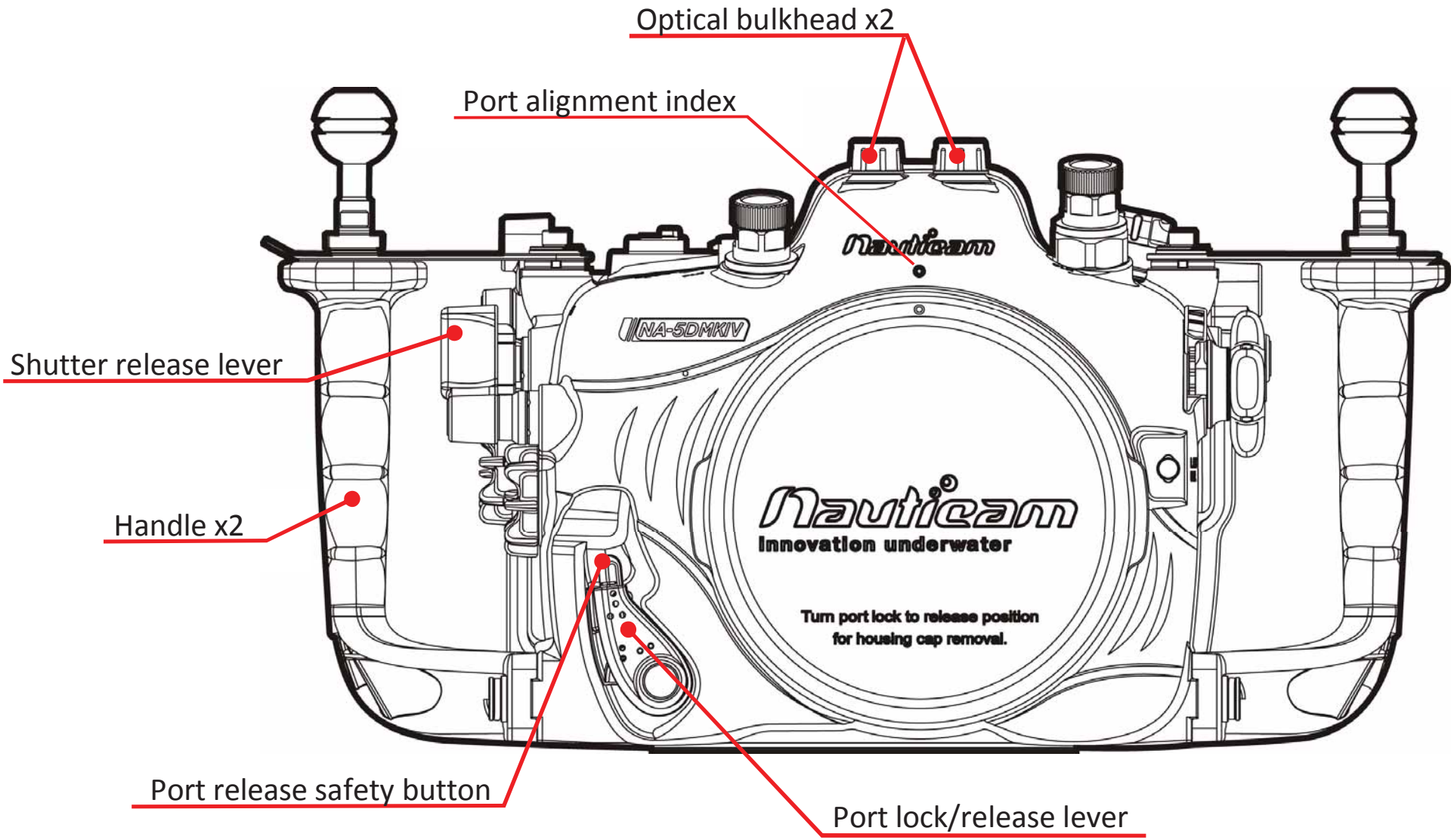

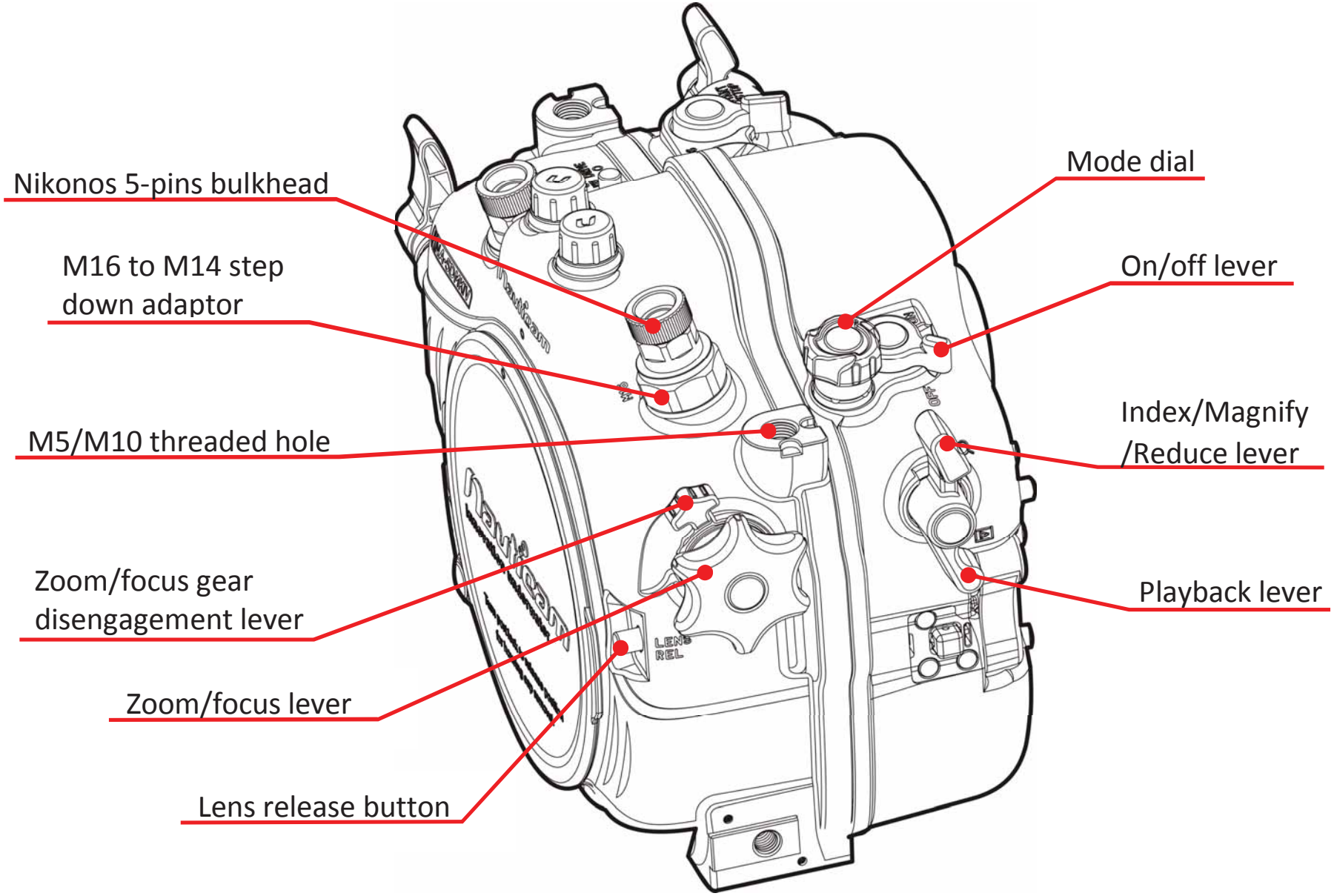
Nikonos 5-pins bulkhead
M16 to M14 step down adaptor
M5/M10 threaded hole
Zoom/focus gear disengagement lever
Zoom/focus lever
Lens release button
Mode dial
On/off lever
Index/Magnify /Reduce lever
Playback lever
LENS REL

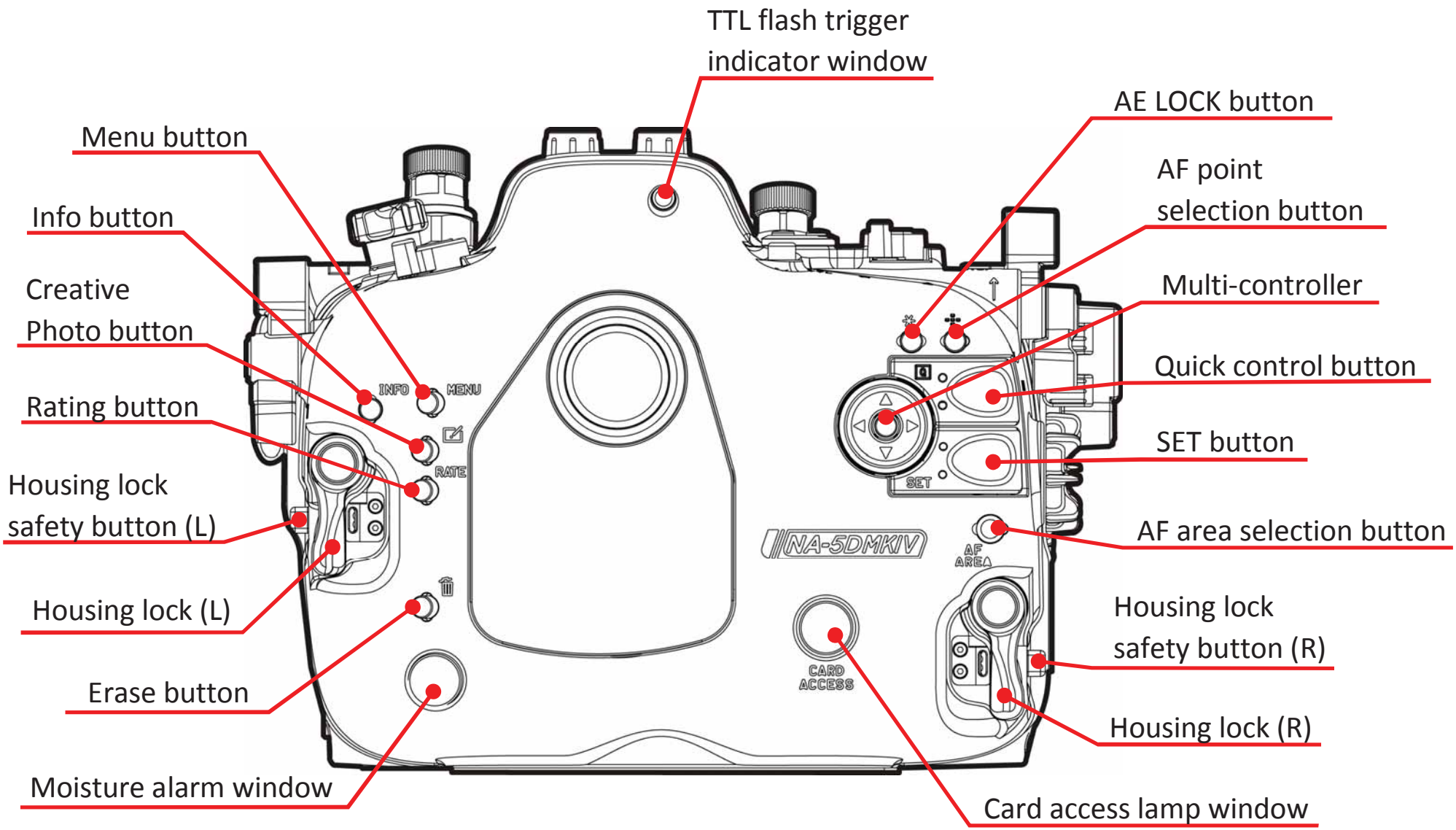
TTL flash trigger indicator window
AE LOCK button
Menu button
AF point selection button
Info button
Multi-controller
Creative Photo button
Quick control button
Rating button
SET button
Housing lock safety button (L)
AF area selection button
Housing lock (L)
Housing lock safety button (R)
Erase button
Housing lock (R)
Moisture alarm window
Card access lamp window
INFO
MENU
RATE
SET
AF AREA
CARD ACCESS
NA-5DMKIV

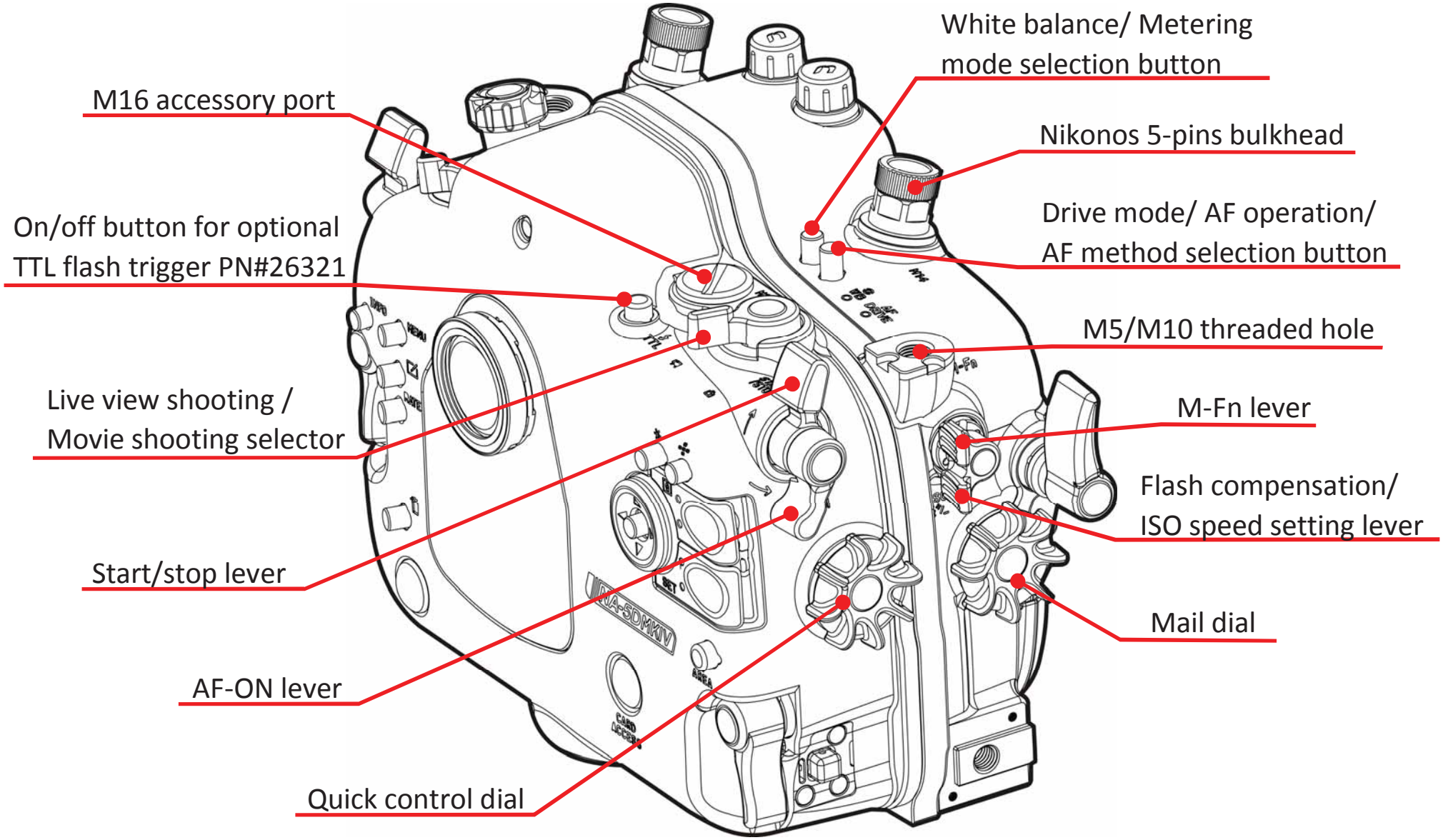
M16 accessory port
On/off button for optional
TTL flash trigger PN#26321
Live view shooting /
Movie shooting selector
Start/stop lever
AF-ON lever
Quick control dial
White balance/ Metering
mode selection button
Nikonos 5-pins bulkhead
Drive mode/ AF operation/
AF method selection button
M5/M10 threaded hole
M-Fn lever
Flash compensation/
ISO speed setting lever
Mail dial

Opening and Closing the Housing

To open the housing:

Always open and close the housing with the front facing down, place the housing on a flat surface or in your lap.

The housing can be opened and closed by operating the two housing locks; when opening, press the safety buttons, then turn the locks outwards.

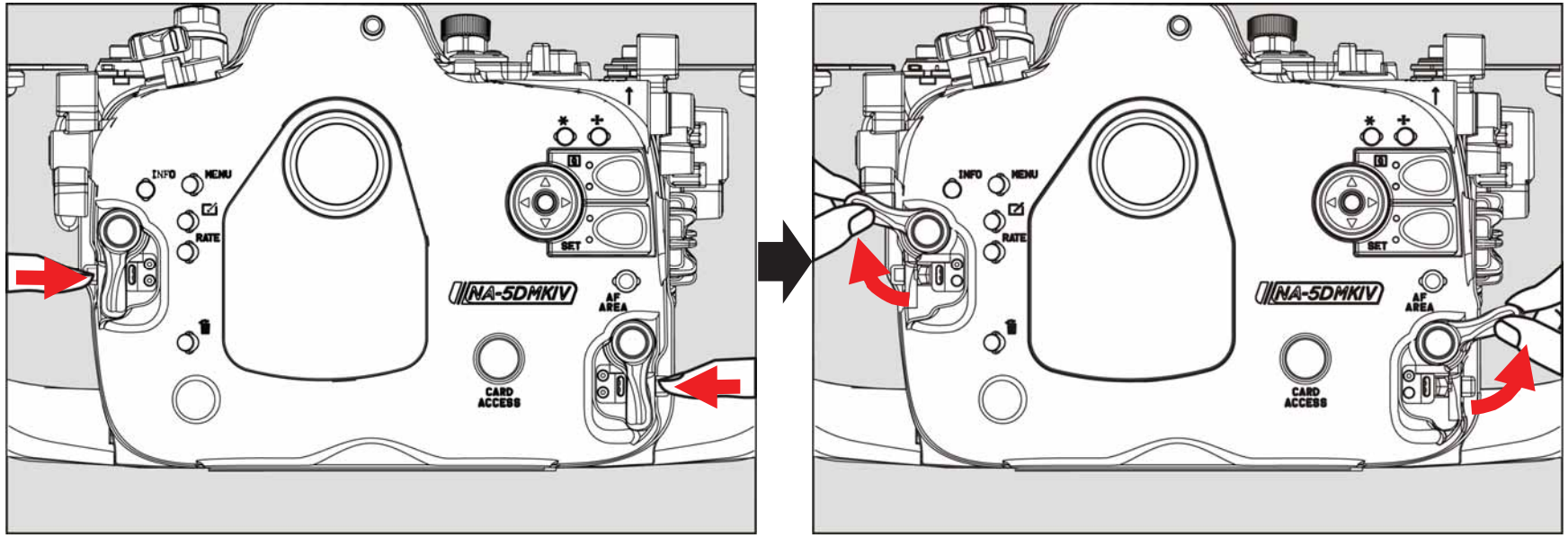

To close the housing:

When closing, make sure there is nothing caught between the closing surfaces of the two halves of the housing.

To close, turn the locks towards the housing, and then make sure they are locked in place securely.

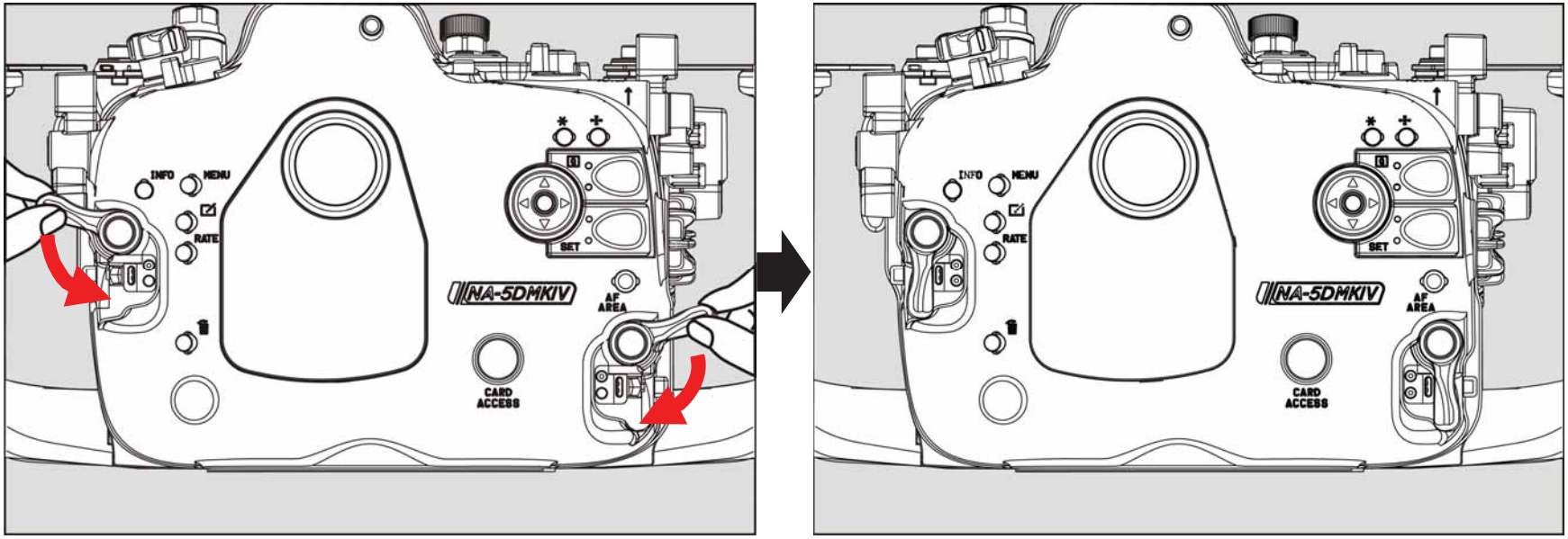

PREPARATION OF THE HOUSING

1. After verifying that the main O-ring is in good condition, lightly coat it with the lubricant provided.

2. Make sure the O-ring groove located in the front part of the housing is free from any foreign material; the groove can be cleaned with the aid of a microfiber cloth.

3. Place the main O-ring into the groove, first at the corners, then the whole perimeter.

4. *Optional*: If necessary, spacers *(#25011)* can be used to increase space between the grip handles and the housing; A pair of small handles *(#28123)* is also available to decrease space between the grip handles and the housing.

5. Setting up the moisture alarm:

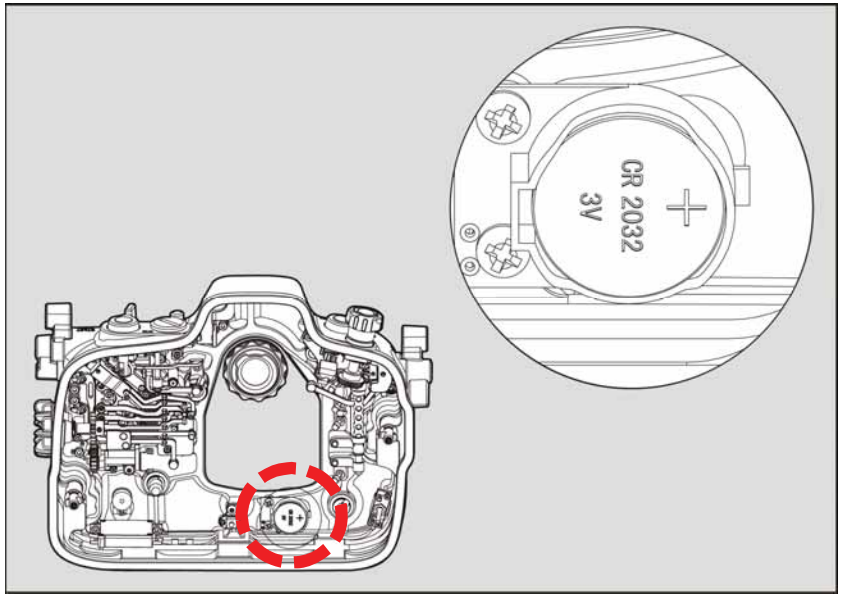

1. Install the CR2032 battery provided into the battery compartment on the circuit board inside the front part of the housing.

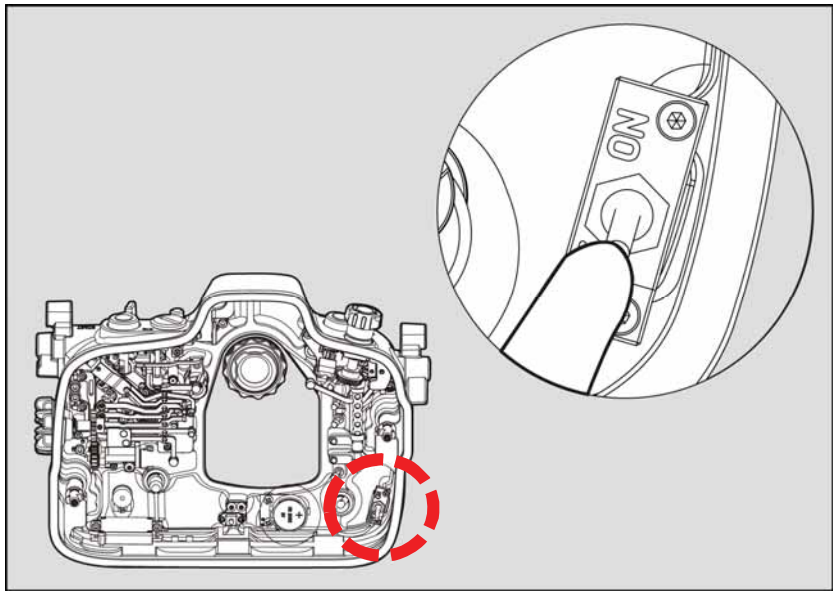

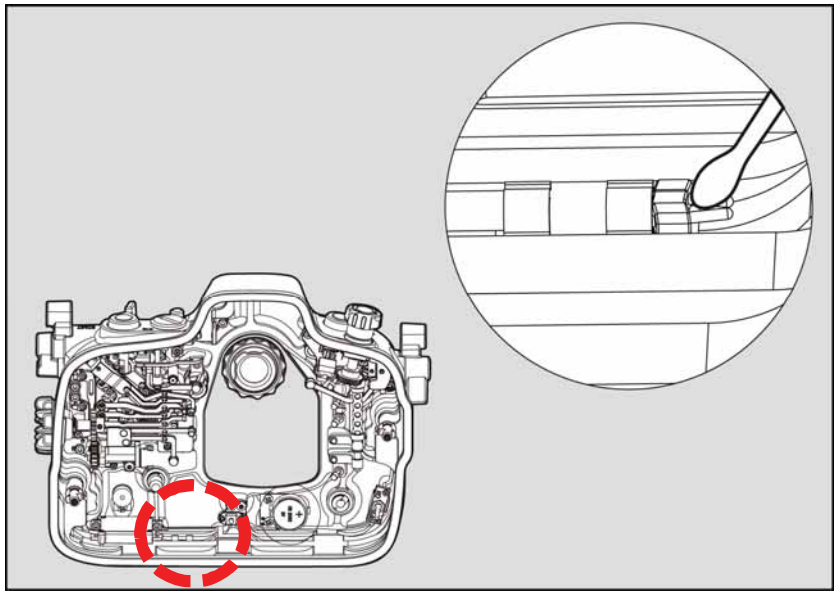

2. Switch the alarm on. The LED light will flash blue once and turn blue for five seconds indicating the battery is normal. Then it goes into flashing blue light standby mode.

3. Test the alarm by connecting the two wires near the bottom of the housing with a damp cotton bud; the alarm should start giving out a repeating “beep” sound along with a flashing red light. The “beep” sound and the light should keep on going for 5 seconds after the removal of the damp cotton bud.

Optional Vacuum Valve:

Vacuum valve can be attached to the housing via one of the accessory port for conducting a vacuum seal test. Please refer to the manual of the vacuum valve for details of the operation.

LED status identification:

On start up:

LED indicator	***Status***
Flash “Blue” light once	Indicates a 2nd generation PCB
Steady "Blue" light	Battery is normal, goes into flashing "Blue" light standby mode after 5 seconds.
"Blue" and "Red" lights alternating	Battery low. Replace battery as soon as possible. Goes into standby mode after 5 seconds.
Steady "Red" light	Battery empty, replace battery.

After start up:

LED indicator	***Status***
Flashing "Blue" light	Standby mode. The moisture alarm is active, and the system is ready for vacuum indication whenever a vacuum is detected.
Flashing "Red" light with beeping sound	Moisture is detected.
Flashing "Yellow" light	Some vacuum is detected, target vacuum level is not reached.
Steady "Green" light	Target vacuum level is reached.
Rapidly flash "Yellow" light	Vacuum is dropping. (Will occur only after target vacuum level is reached)
Rapidly flashing "Red" light	Vacuum is totally lost. Circuit stalled until switched off. (Will occur only after target vacuum level is reached)

To reset when changing port/lens:

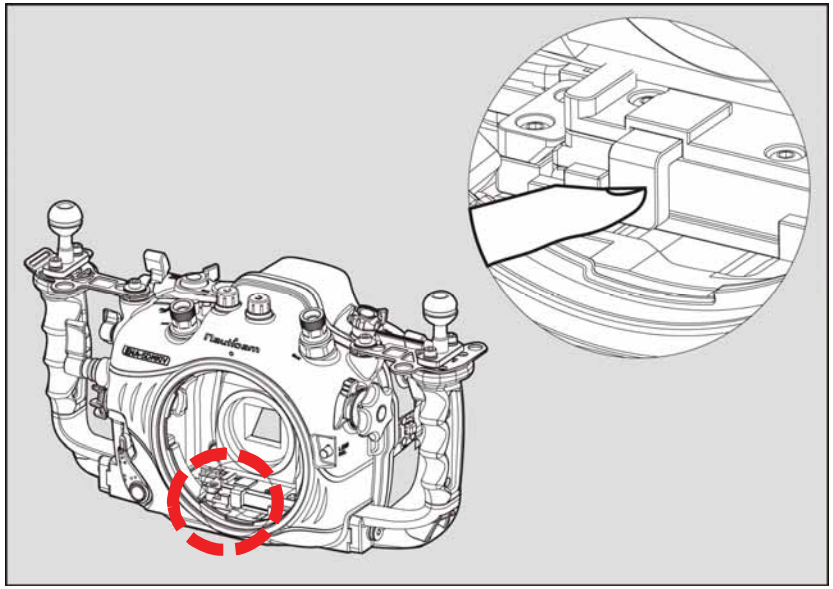

1. Release vacuum.

2. Remove the port and lens from the housing and camera.

3. Press the BLUE button once to reset the system. The LED light will turn blue for five seconds then it goes into flashing blue light standby mode.

INSTALLING THE CAMERA

To install the camera into to the housing:

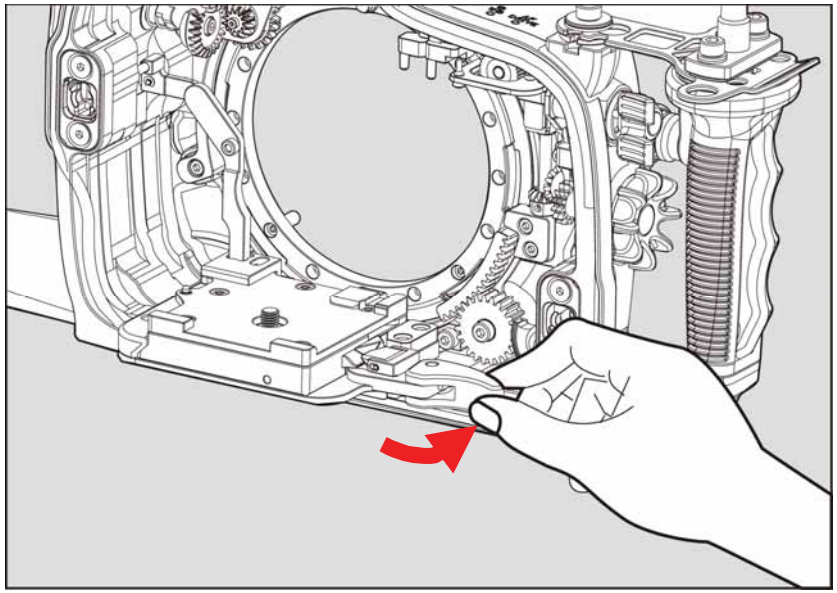

1. Turn the locking lever on the tray of the housing to the “open” position.

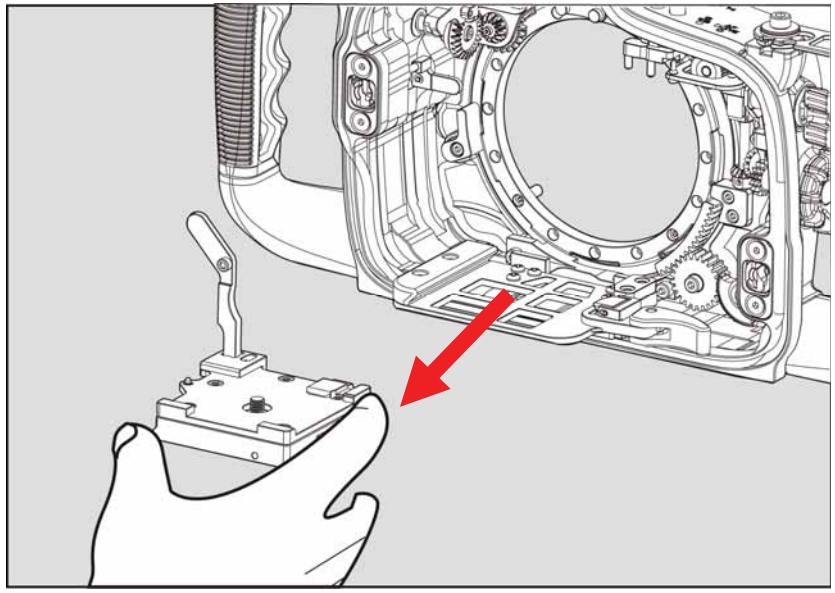

2. Remove the camera saddle from the housing.

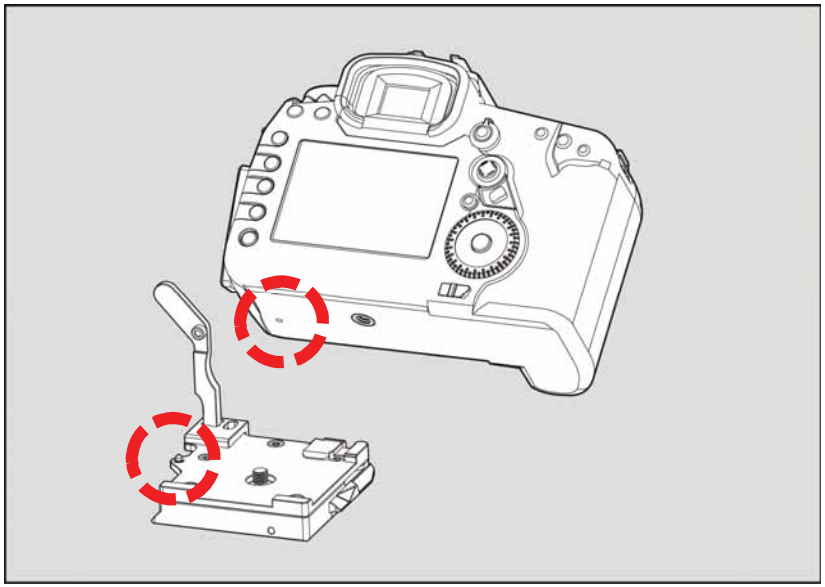

3. Align the pin on the saddle with the opening in the bottom of the camera as indicated in the diagram.

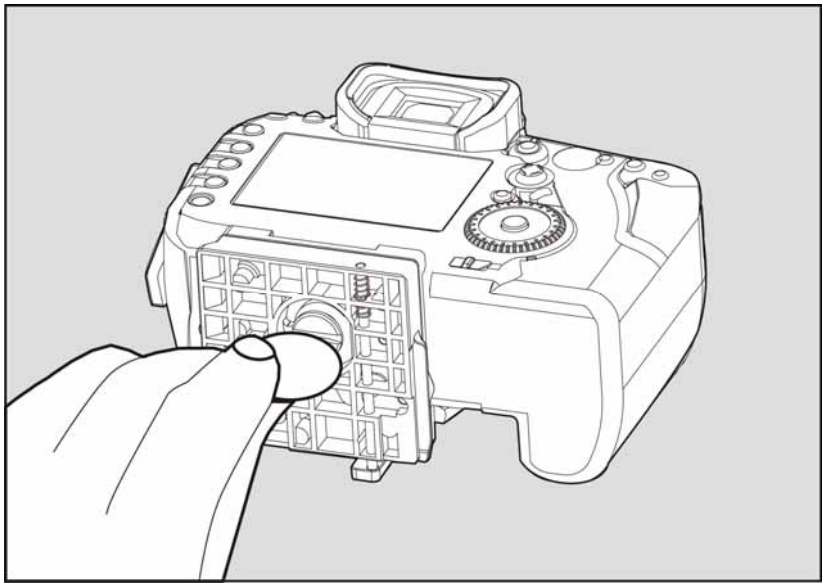

4. Attach the saddle to the camera by tightening the screw to the tripod socket of the camera with a screwdriver or a coin.

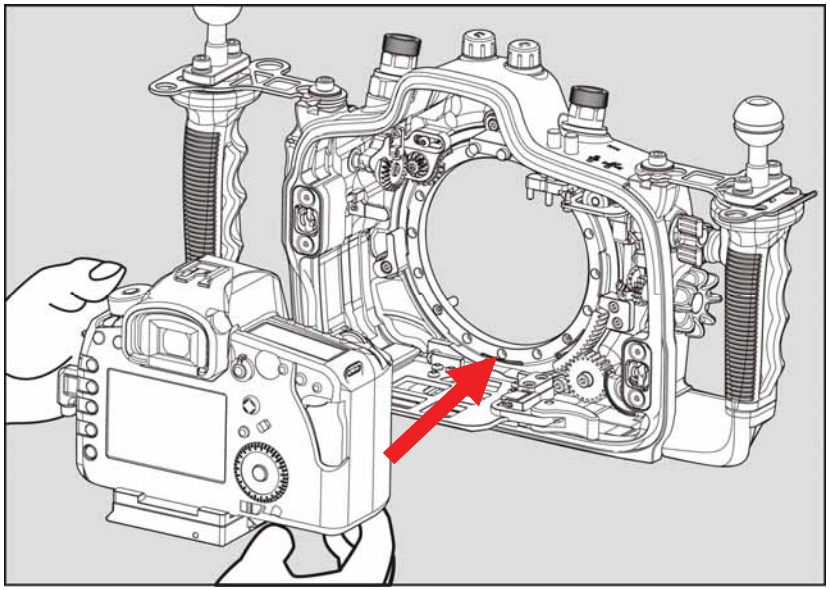

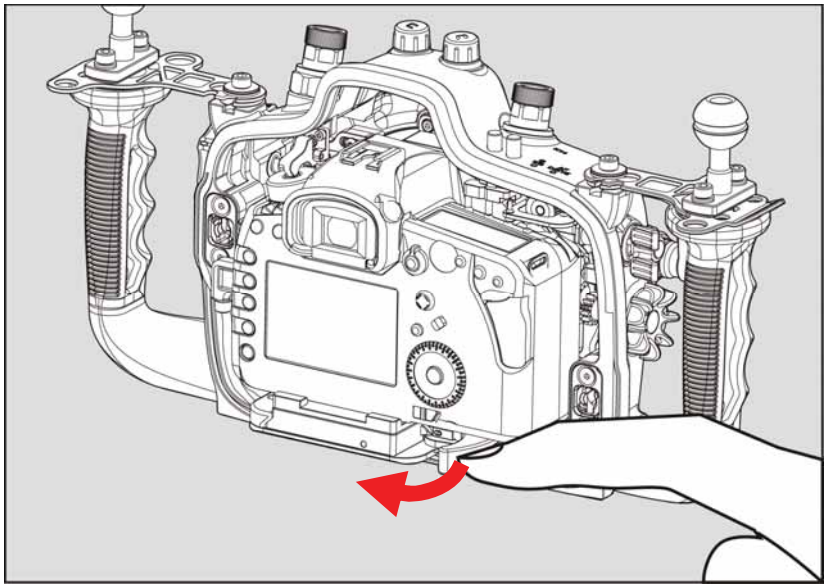

5. Mount the camera by sliding the attached saddle along the rail in the housing until it cannot go in any further.

6. Lock the camera into place by turning the locking lever to the “lock” position.

7. Confirm that all the controls of the housing are correctly engaged.

8. For removal of the camera from the housing, reverse the above procedures.

MOUNTING THE PORT

Please refer to the NAUTICAM system port chart for a range of compatible ports; note that extension rings may be needed for certain lenses and adaptors are available for the attachment of ports of other manufacturers.

To remove housing cap/ port:

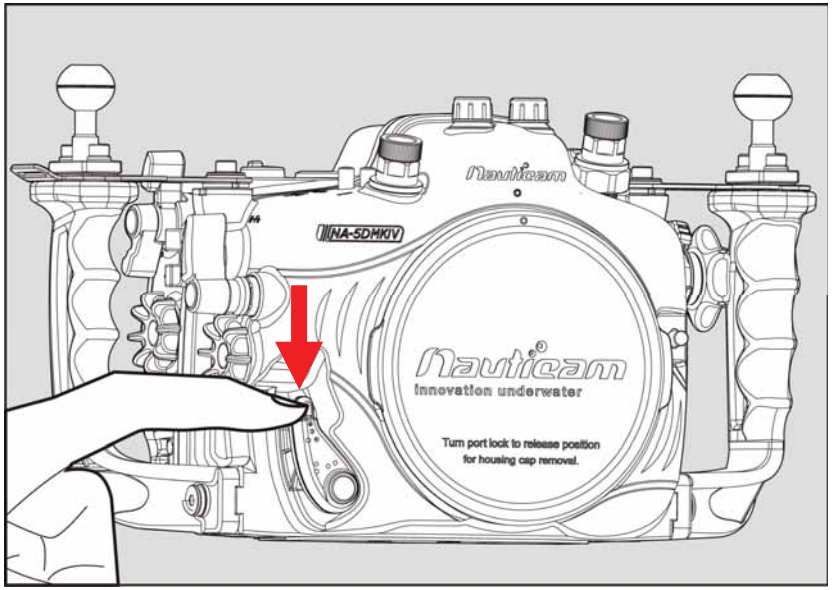

1. Push the safety button of the port locking lever downwards.

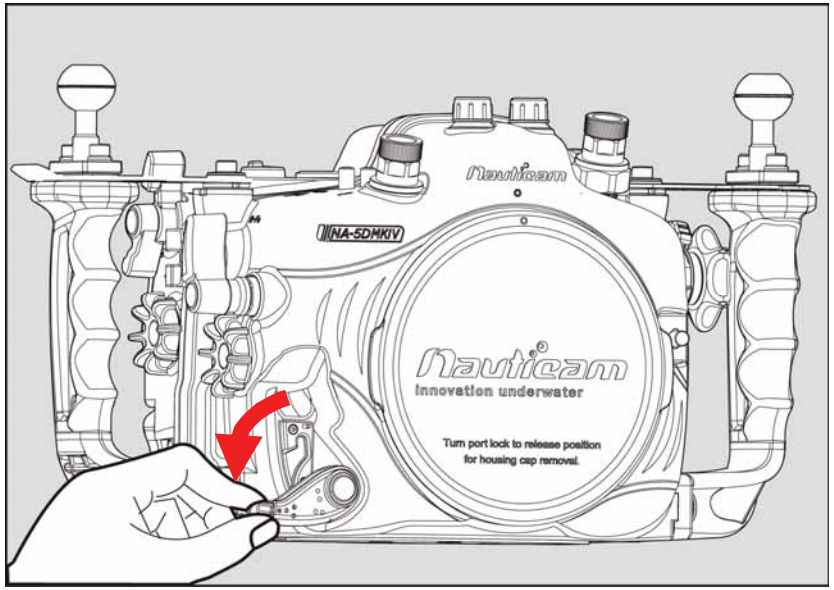

2. Turn the port locking lever to the release position as shown.

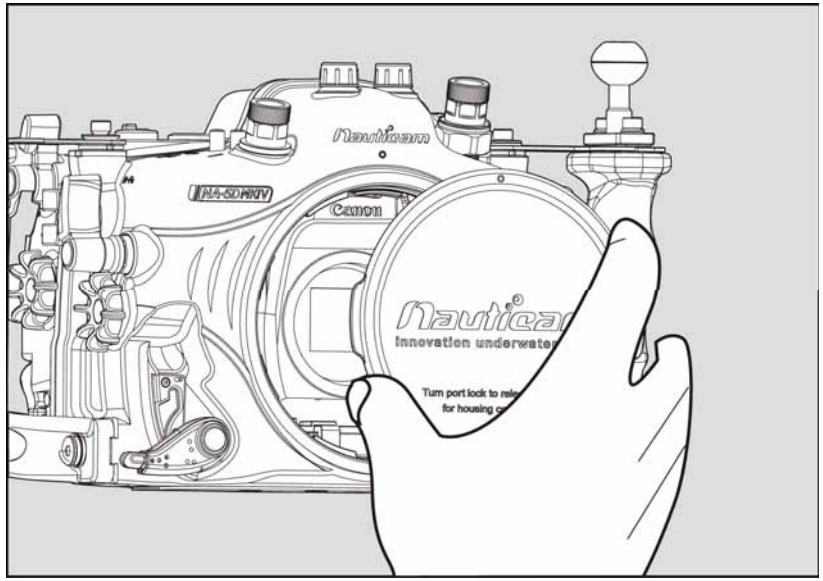

3. Lift housing cap.

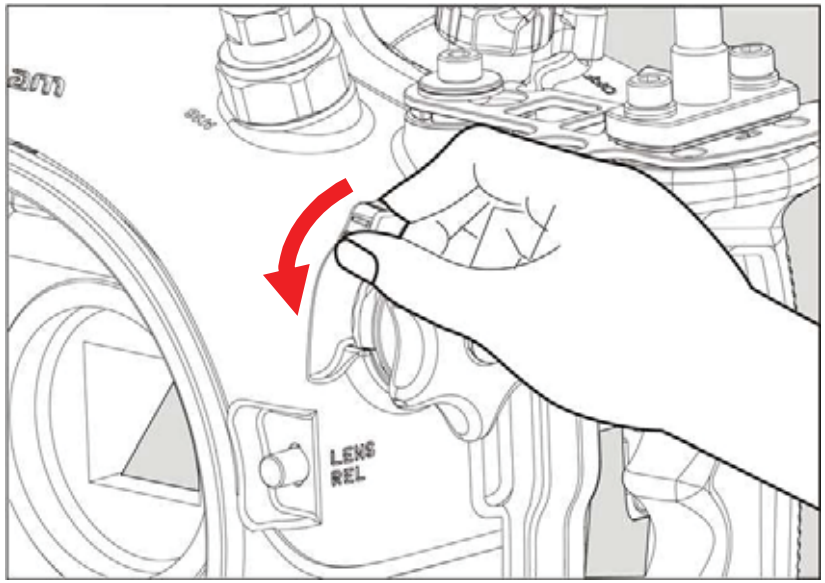

4. Pull down the Zoom/ focus gear disengagement lever before mounting lens (with gears installed) to the camera. Engage the gears by pulling up the lever to the original position. Confirm that the zoom/focus knob operates correctly.

To mount port:

1. Remove the O-ring from the port, inspect for any damage and lightly coat it with the provided lubricant before placing it back into its groove.

2. Verify that the port opening of the housing is clean and free from foreign material.

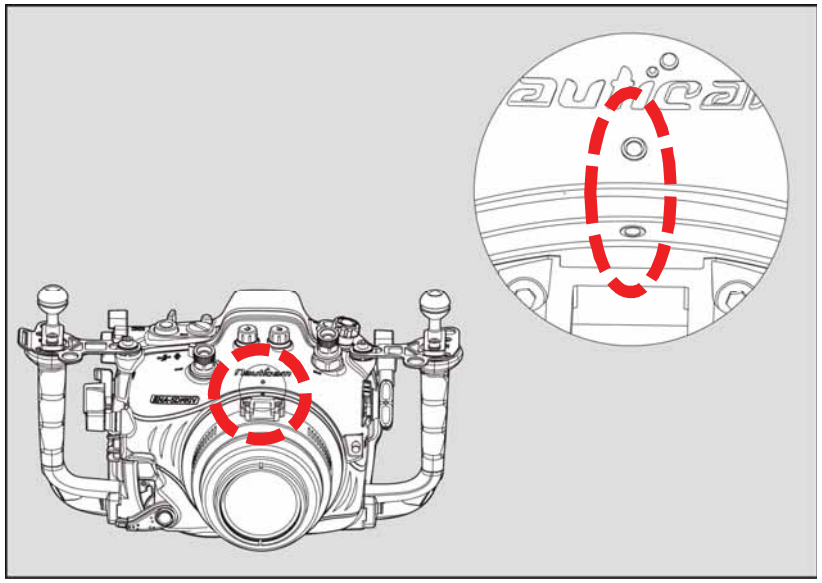

3. Align the mounting indices of the port and the housing; these appear as white circles on both the port and the housing.

4. Gently push the port into the opening of the housing, until it cannot go in any further.

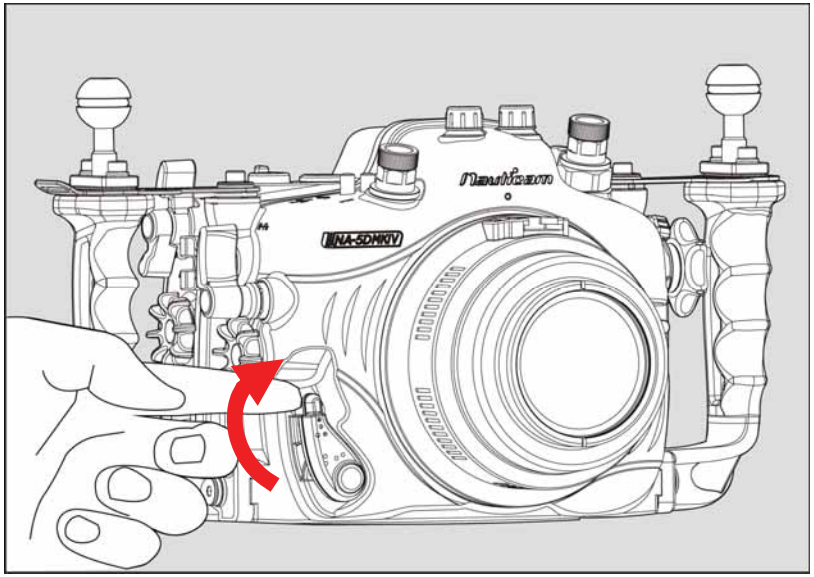

5. Lock the port into place by turning the port locking lever to the inward position. To ensure that the port is securely mounted, confirm that the green line on the safety button of the port locking lever is visible.

6. To remove the port from the housing, simply turn the port locking lever to the outward position and gently pull it out.

CHANGING THE VIEWFINDER

In order that users can change to a preferred viewfinder easily, the 0.66X viewfinder which comes with this housing is designed so that it can be removed and re-installed by following the simple steps described below.

To remove the viewfinder:

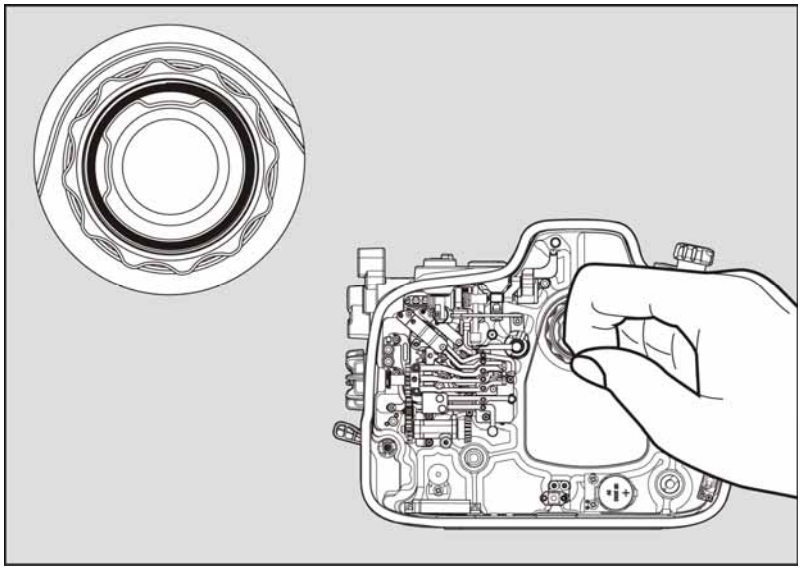

1. Remove the retainer O-ring of the viewfinder inside the rear half of the housing by making use of the recess on the viewfinder.

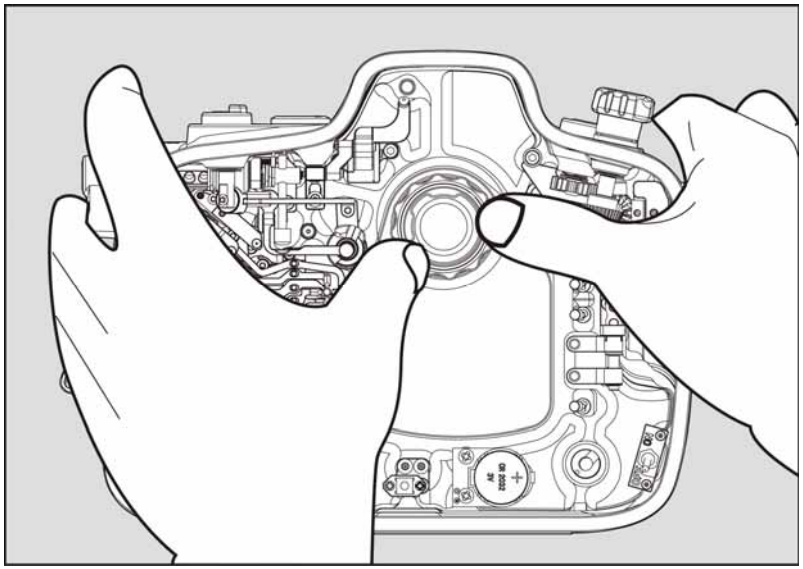

2. Gently push the viewfinder from the inside of the housing.

To re-install the viewfinder:

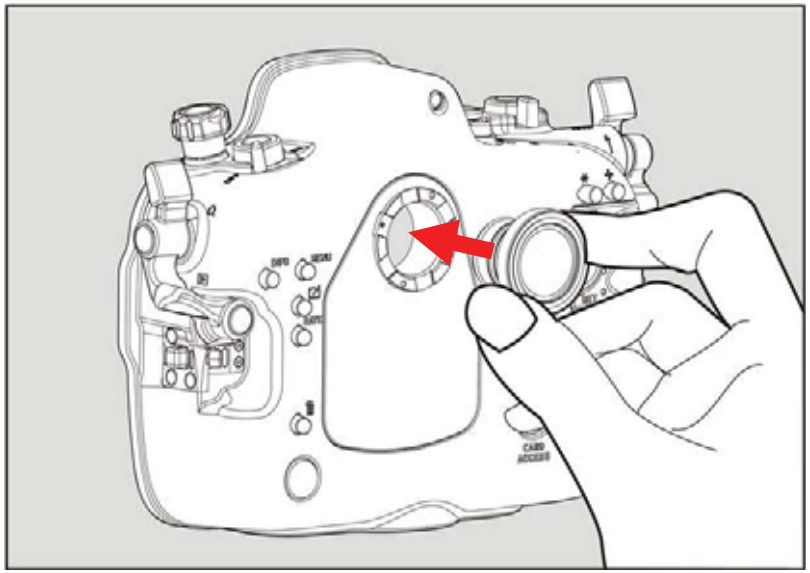

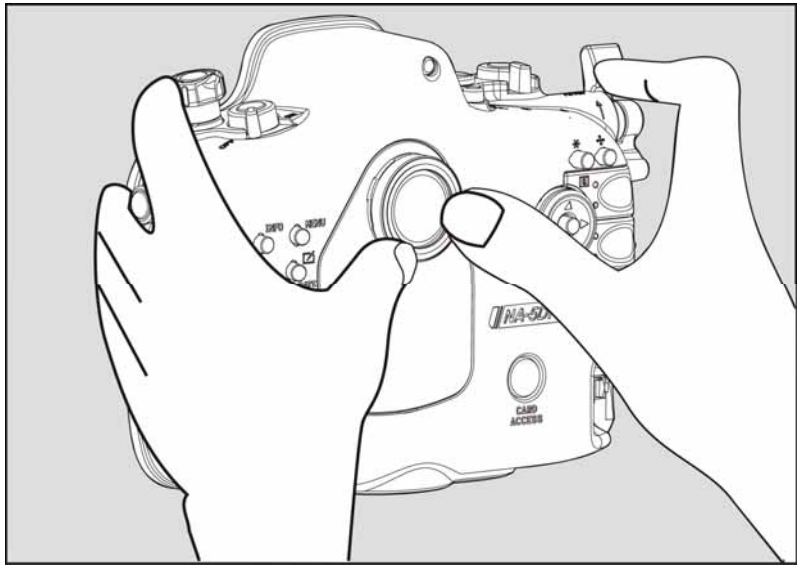

1. Lightly coat the O-rings on the outer periphery of the viewfinder body with lubricant.

2. Align the viewfinder with the sleeve in the display window.

3. Push the viewfinder from the outside of the housing until it cannot go in any further.

4. Place the retainer O-ring of the viewfinder back from inside the housing.

CARE AND MAINTENANCE

- Soak the housing system in fresh water after each salt water use, during which all control buttons/knobs should be operated a few times to avoid the accumulation of salt residue; wipe the housing with a towel before opening.

- Carefully press the housing lock safety button for a few times to avoid the accumulation of salt residue.

- After each day of diving, it is advisable to have the main O-ring in the front part of the housing removed from its groove with the O-ring remover and inspected for damage. Also check that the O-ring retains its original circular shape; never stretch the O-ring excessively or remove it with a sharp object. The O-ring groove should be cleaned to ensure it is free from any salt deposit or foreign material; lightly coat the O-ring with the provided lubricant before reinstalling it in the groove. A damaged O-ring should be discarded immediately and replaced only with one that is provided by NAUTICAM.

- Replace the main O-ring annually. It is recommended that you ship the housing to our distributor for a complete overhaul every year or after every 200 dives.

OPTIONAL ACCESSORIES

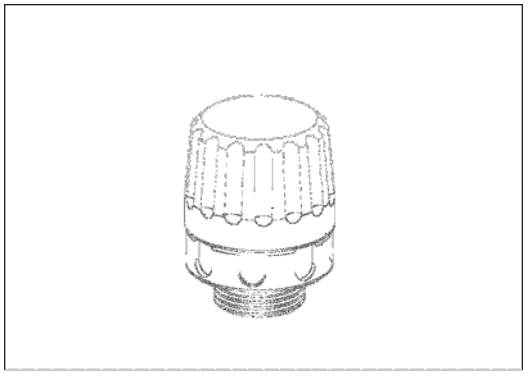

P.N. 25624
M14 Vacuum Valve II
(Pushbutton Release)

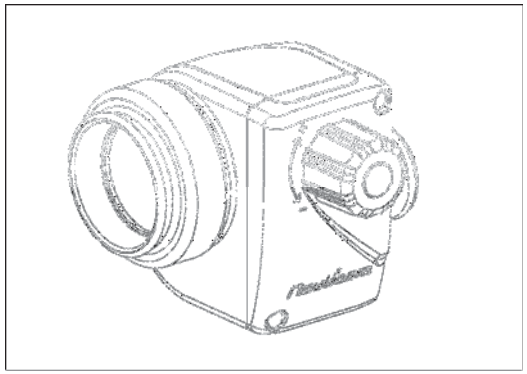

P.N. 32201
Nauticam 180˚ straight viewfinder

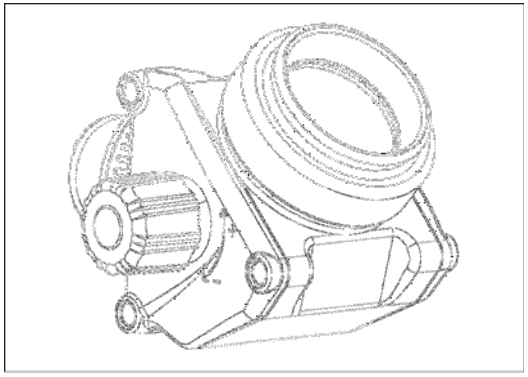

P.N. 32203
Nauticam 45˚ viewfinder

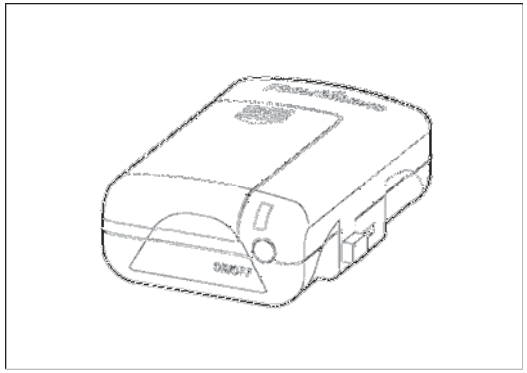

P.N. 26321
TTL Flash Trigger for Canon

NAUTICAM International Limited

Rm2203, CCT Telecom Building,
11 Wo Shing Street, Fotan,
HONG KONG

Web: www.nauticam.com
E-mail: enquiry@nauticam.com
Tel: +852 2690 2711
Fax: +852 2690 9778